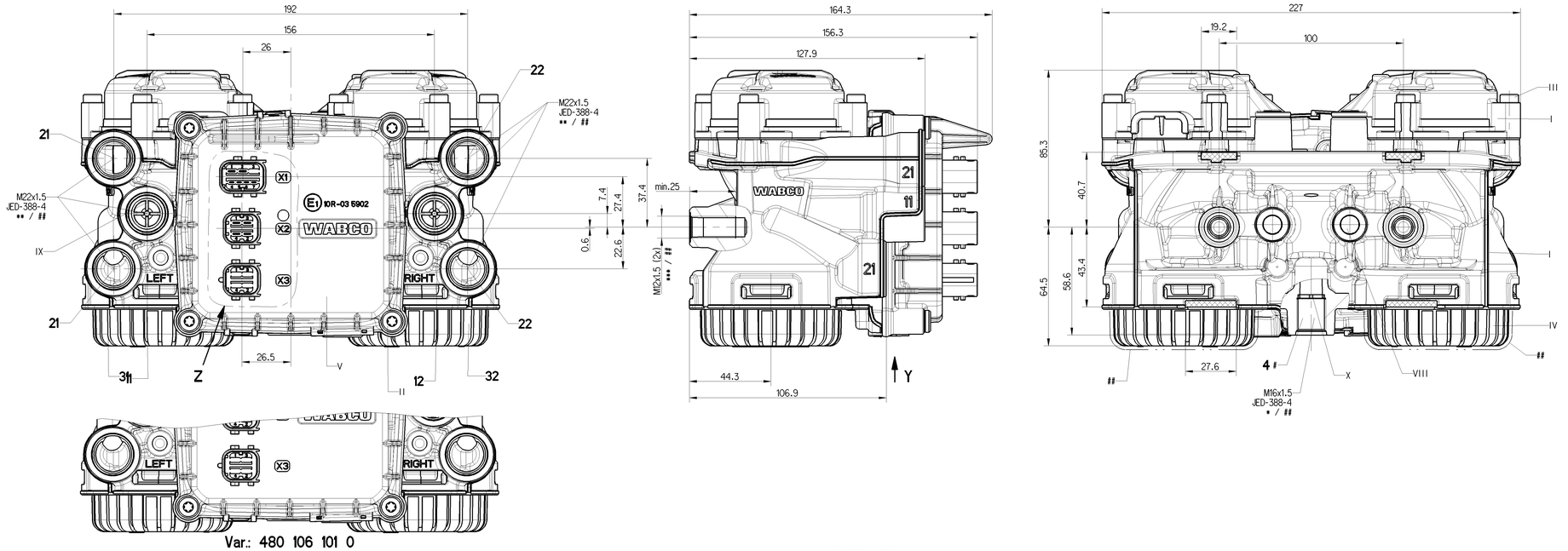

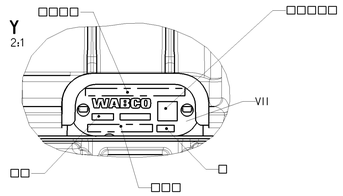

□ MANUFACTURING PLANT :
PRODUKTIONSSTAETTE : JED-225
LIEU DE FABRICATION :
LUOGO DI FABRICAZIONE :

□□ WEEK / YEAR OF MANUFACTURE
FERTIGUNGSWOCHE / -JAHR
SEMAINE / ANNEE DE FABRICATION
SETTIMANA / ANNO DELLA FABRICAZIONE

□□□ WABCO-DEVICE NUMBER
WABCO-GERAETE NUMMER
WABCO-NUMERO D'APPAREIL
WABCO-NUMERO CODICE DELL APPARECCHIO

□□□□ CUSTOMER NO. / ZGS
KUNDEN-NR. kZ / ZGS
NO CLIENT / ZGS
NO CLIENTE / ZGS

□□□□□ DATA MATRIX CODE

CONNECTOR ACCORDING TO INTERFACE DRAWING:
STECKER GEMAESS SCHNITTSTELLENZEICHNUNG:
CONNECTEUR SUIVANT DESSIN D'INTERFACE:
CONNETTORE SECONDO DISEGNO DI INTERFACCIA:
TYCO-INTERFACE DRAWING:
TYCO-AUSFUEHRUNGSVORSCHRIFT:
TYCO-PRESCIPTION D'EXÉCUTION:
TYCO-SPECIFICA ESECUZIONE:

858 000 854 4
DOC-Code 007, Rev. "F"
##
C-114-18740-1 Rev. "D"

CODING:
KODIERUNG: A
CODIFICATION:
ESPRESSIONE IN CODICE:

CONNECTOR ACCORDING TO INTERFACE DRAWING:
STECKER GEMAESS SCHNITTSTELLENZEICHNUNG:
CONNECTEUR SUIVANT DESSIN D'INTERFACE:
CONNETTORE SECONDO DISEGNO DI INTERFACCIA:
TYCO-INTERFACE DRAWING:
TYCO-AUSFUEHRUNGSVORSCHRIFT:
TYCO-PRESCIPTION D'EXÉCUTION:
TYCO-SPECIFICA ESECUZIONE:

858 000 852 4
DOC-Code 007, Rev. "D"
##
C-114-18739-1 Rev. "D"

CODING:
KODIERUNG: B
CODIFICATION:
ESPRESSIONE IN CODICE:

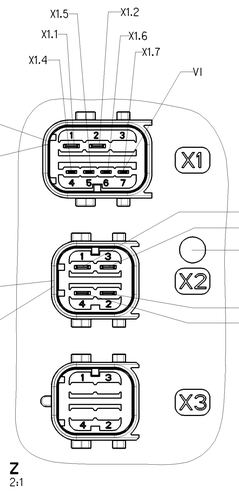

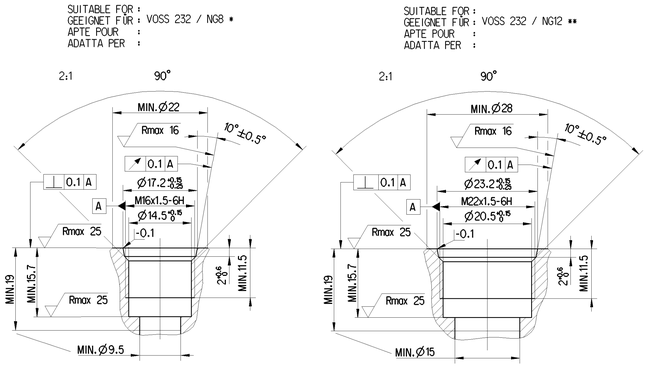

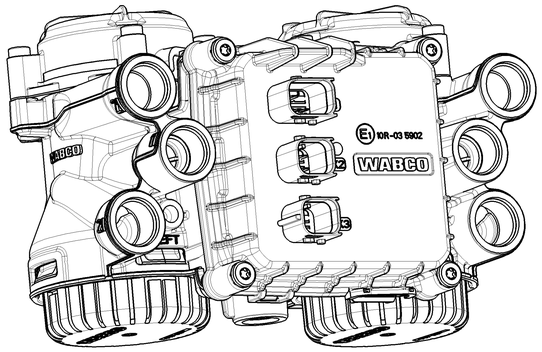

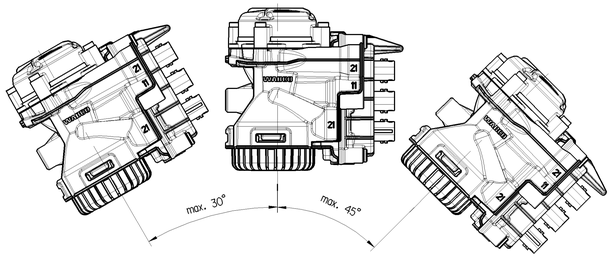

ATTENTION: PORT 4 (BACK-UP PORT) SHALL NOT BE CLOSED WITH FILLER PLUG
ACHTUNG: ANSCHLUSS 4 (REDUNDANZ) DARF NICHT MIT BLINDSTOPFEN VERSCHLOSSEN WERDEN
ATTENTION: ORIFICE 4 (REDONDANCE) NE DOIT PAS ETRE FERME AVEC OBTURATEUR
ATTENZIONE: ORIFIZIO 4 (RIDONDANZA) NON DEVE ESSERE CHIUSO CON OTTURATORE

COVER WHEN PAINTING ON THE VEHICLE
BEI LACKIERUNG IM FAHRZEUG ABDECKEN
COUVRIR AU LAQUAGE SUR LE VÉHICULE
COPRIRE ALLA LACCATURA SUL VEICOLO

DEVICE DESIGNED FOR INSTALLATION ON THE VEHICLE FRAME
GERÄT IST FÜR DEN RAHMENANBAU VORGESEHEN
L'APPAREIL EST CONCU POUR MONTAGE SUR LE CADRE DU CHÂSSIS
APPARECCHIO APPOSITO PER MONTAGGIO SUL TELAIO

ANODIC OXIDATION
ANODISCHE OXIDATION
OXIDATION ANODIQUE
OSSIDAZIONE ANODICA

BEARING SURFACE
AUFLAGEFLAECHE
SURFACE D'APPUI
PIANO D'APPOGGIO

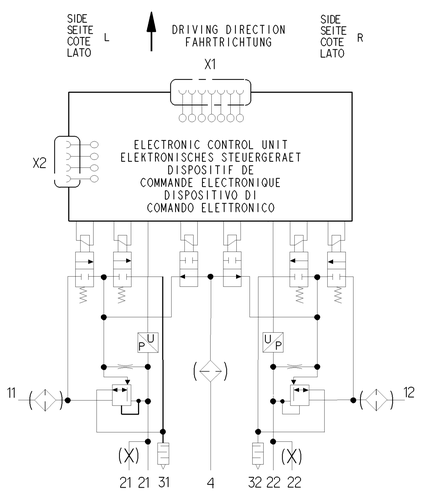

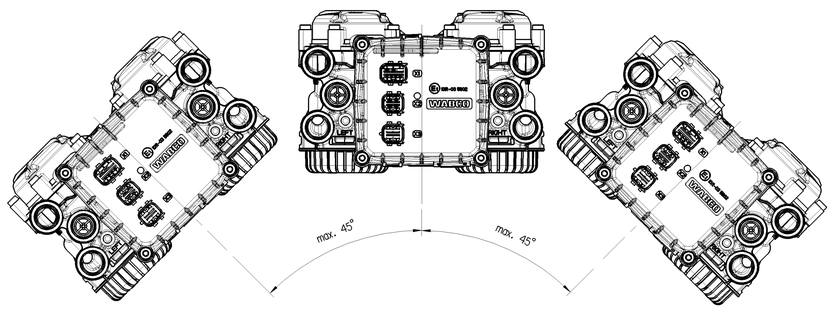

PERMISSIBLE INSTALLATION POSITION
ZULAESSIGE EINBAULAGE
POSITION D'INSTALLATION ADMISE
POSIZIONE DI MONTAGGIO AMMESSA

	MATERIAL MATERIAL MATERIAU MATERIALE		SURFACE PROTECTION OBERFLAECHENSCHUTZ PROTECTION SUPERFICIELLE PROTEZIONE SUPERFICIALE	
I	Al	JED-029M1	Cr	JED-259-1
II	Fe	JED-051M4	Zn/Fe	JED-256-4
III	Fe	JED-051M4	Zn/Fe	JED-256-4
IV	Pa6.6	JED-354-1		
V	PBT-GF30	JED-352-1		
VI	CuNiSi	JED-826	Sn	1,5µm - 3µm
VII	Al	JED-077-1	###	JED-007-1
VIII	St	JED-058MO		
IX	Pa6.6-GF25 + Pa6.6	JED-483 + JED-484		
X	Pa6.6 + Pa6.6	JED-330 + JED-484		

	*	**	***	M12 x 1,5
TORQUE ACCORDING TO JED-366 ANZUGSMOMENT ENTSPRECHEND JED-366 COUPLE DE SERRAGE SUIVANT JED-366 COPPIA DI SERRAGIO SECONDO JED-366	M16 x 1,5	M22 x 1,5	TORQUE ANZUGSMOMENT COUPLE DE SERRAGE COPPIA DI SERRAGGIO	max. 110 Nm
FOR THREAD PERMISSIBLE FUER GEWINDE ZULAESSIG POUR FILETAGE ADMISE PER FILETTATURA AMMESSA	max. 34 Nm	max. 53 Nm	LENGTH OF ENGAGEMENT EINSCHRAUBLAENGE LONGUEUR EN PRISE LUNGHEZZA IN PRESA	>17 mm

General Specification: JED-334-1 ; Size ISO 14405 LP
Further Technical Data: 480 106 000 0
Doc. Code: 035 Sheet: To

General Tolerances JED-261

		Range of Nominal Dimensions (± mm)				
Class		≤ 50	> 50 ≤ 180	> 180 ≤ 400	> 400	∠
Fine		0.5	1.0	1.5	2.0	
Medium	X	1.0	2.0	3.0	4.0	±3°
Coarse		2.0	3.5	5.0	6.5	

Tapped Holes acc. JED-388-4
II Tolerance Class Applied Crossnarrowed

Copyright WABCO®

Date	Signature
Drawn 2015-04-20	Etze
Checked 2015-04-24	Beier
Expert Beier	

Mass: 3.4 KG
Scale: 1:1 (2:1)
Size: A 0
CAD System: CREO

WABCO

EBS AXLE MODULATOR
EBS-ACHSMODULATOR
MODULATEUR D'ESSIEU EBS
MODULATORE ASSALE EBS

Material No.: 480 106 100 0
Doc.Code: 053
Language: ML
Sheet: 1/2

Date of first issue: 2015-08-17

EZNr.No.	Revision	Techn. Reg.	Replacement for
167360	- F	6840	884 013 085 0

100mm

DEVICE NUMBER GERAETE NUMMER NUMERO D'APPAREIL NUMERO CODICE DELL APPARECCHIO □□□	CUSTOMER NO. KUNDEN-NR. kZ NO CLIENT NO CLIENTE □□□□	SOFTWARE STATUS SOFTWARESTAND ETAT DU LOGICIEL STATO DEL SOFTWARE	WEEK / YEAR OF MANUFACTURE FERTIGUNGSWOCHE / -JAHR SEMAINE / ANNEE DE FABRICATION SETTIMANA / ANNO DELLA FABRICAZIONE □□	CONNECTION/FILTER ANSCHLUSS/FILTER CONNEXION/FILTRE CONNESSIONE/FILTRO 11	12	4	21	21	22	22	X1	X2	X3	APPLICATION ANWENDUNGSBEREICH APPLICATION APPLICAZIONE	REMARKS BEMERKUNGEN REMAQUES NOTE
~~480 106 101 0~~		~~AD0422_5_2~~	~~CW17/12~~	~~X/X~~	~~X/X~~	~~X/X~~	~~X~~	~~-~~	~~X~~	~~-~~	~~X~~	~~X~~	~~-~~		WTRP CW 13/2014 Ⓕ
~~480 106 102 0~~		~~AD0422_5_2~~	~~CW17/12~~	~~X/X~~	~~X/X~~	~~X/X~~	~~X~~	~~X~~	~~X~~	~~X~~	~~X~~	~~X~~			WTRP CW 13/2014 Ⓕ
480 106 103 0		AD040026 Ⓕ	CW46/13 Ⓕ	X/X	X/X	X/X	X	X	X	X	X	X	-		
480 106 104 0		AD040025 Ⓕ	CW19/13 Ⓕ	X/-	X/-	X/-	X	X	X	X	X	X	-		
480 106 105 0	1867002 Ⓕ	AD040025 Ⓕ	CW06/13 Ⓕ	X/X	X/X	X/X	X	X	X	X	X	X	-		Change see CCT ECN 167360 Ⓕ

WORKING MEDIUM : AIR
ARBEITSMEDIUM : LUFT
FLUIDE D'UTILISATION : AIR
FLUIDO DI ESERCIZIO : ARIA

AMBIENT ENVIRONMENT : AIR
UMGEBUNGSMEDIUM : LUFT
FLUIDE AMBIENT : AIR
FLUIDO AMBIENTE : ARIA

THERMAL RANGE OF APPLICATION :
THERMISCHER ANWENDUNGSBEREICH : -40° ... +80°C
PLAGE DE TEMPERATURE EN :
CAMPO D'APPLICAZIONE TERMICA NELLE:

FOR FURTHER INFORMATIONS SEE TECHNICAL SPECIFICATION
WEITERE INFORMATIONEN SIEHE TECHNISCHE SPEZIFIKATION
POUR AUTRES INFORMATION VOIR TECHNIQUE SPECIFICATION
PER ULTERIORI INFORMAZIONE VEDERE TECNICI SPECIFICA

SHORT TERM RESISTANCE TO HEAT (UNPRESSURIZED, CURRENTLESS, WITHOUT FUNCTION) : MAX. 1h AT 110°C OR MAX. 2h AT 95°C
KURZZEITIGE WAERMEBESTAENDIGKEIT (DRUCKOS, STROMLOS, OHNE FUNKTION) : MAX. 1h AT 110°C ODER MAX. 2h BEI 95°C
RESISTANCE THERMIQUE TEMPORAIRE (SANS PRESSION, SANS COURANT, SANS FONCTION) : MAX. 1h À 110°C OU MAX. 2h À 95°C
RESISTANZA TERMICA PER BREVE PERIODO (SENZA PRESSIONE, SENZA CORRENTE, SENZA FUNZIONE) : MAX. 1h A 110°C O MAX. 2h A 95°C

WORKING PRESSURE (SUPPLY) :
BETRIEBSDRUCK (VORRAT) : p_e = min. 10 bar max. 13 bar
PRESSION D'UTILISATION (ALIMENTATION) :
PRESSIONE DI ESERCIZIO (ALIMENTAZIONE) :

MAX. PERMISSIBLE WORKING PRESSURE (SUPPLY) :
MAX. ZULAESSIGER BETRIEBSDRUCK (VORRAT) : p_e = 15 bar
PRESSION D'UTILISATION MAX. ADMISSIBLE (ALIMENTATION) :
PRESSIONE DI ESERCIZIO MAX. AMMISSIBILE (ALIMENTAZIONE) :

TEMPORARY WITHOUT FUNCTION
KURZZEITIG OHNE FUNKTION
DE COURTE DUREE SANS FONCTION
BREVE TEMPO SOLO SENZA FUNZIONE

VOLTAGE / SPANNUNG / TENSION / TENSIONE
TERMINAL / ANSCHLUSS X2.1 / X2.2 / BORNE / TERMINALE : $24^{+8}_{-9,5}$ V

MAX. CURRENT / MAX. STROM / COURANT MAX. / CORRENTE MAX.
TERMINAL / ANSCHLUSS X2.1 / X2.2 / BORNE / TERMINALE : 7 A / 10 bar (p_{21}, p_{22})
DIRECT CURRENT / GLEICHSTROM / COURANT CONTINU / CORRENTE CONTINUA

DATA TRANSFER :
DATENUEBERTRAGUNG (X2) : CAN
TRANSFERT DE DONNEES :
TRANSFERIMENTO DATI :
ACCORDING TO / NACH / SUIVANT / SECONDO ISO 11898

TYPE OF PROTECTION / SCHUTZART / MODE DE PROTECTION / TIPO DI PROTEZIONE
: COMPLETE DEVICE WITH MOUNTED COUPLING :
: KOMPLETTES GERAET MIT MONTIERTER KUPPLUNG : IP 6K6K , IP 6K9K
: APPAREIL COMPLET AVEC L'ACCOUPLEMENT MONTE :
: APPARECCHIO COMPLETO CON ACCOPPIAMENTO MONTATO :

: ELECTRIC TERMINALS WITHOUT MOUNTED COUPLING :
: ELEKTRISCHE ANSCHLUESSE OHNE MONTIERTER KUPPLUNG : IP 6K7
: BORNES ELECTRIQUES SANS L'ACCOUPLEMENT MONTE :
: TERMINALI ELETTRICI SENZA ACCOPPIAMENTO MONTATO :

PROTECTION CLASS ACC. TO
SCHUTZKLASSE NACH DIN VDE 0580
CLASSE DE PROTECTION SELON
CLASSE DI PROTEZIONE SECONDO

TENSION FREE MOUNTING OF THE LINES
SPANNUNGSFREIE MONTAGE DER LEITUNGEN
MONTAGE DES CONDUITES EXEMPT DE TENSION
FISSAGGIO DEI CONDOTTI SENZA TENSIONE

HANDLING, STORAGE, PACKAGING, PRESERVATION AND DELIVERY
HANDHABUNG, LAGERUNG, VERPACKUNG, KONSERVIERUNG UND VERSAND 480 020 000 0 (DOC 535)
MANUTENTION, STOCKAGE, CONDITIONNEMENT, PRESERVATION ET LIVRAISON
MOVIMENTAZIONE, IMMAGAZZINAMENTO, IMBALLAGGIO, CONSERVAZIONE E CONSEGNA

MAX. LEAKAGE, DURING PRESSURE MAINTENANCE OR WHILE NOT OPERATED, NEW DEVICE
MAX. LECKAGE, DRUCKHALTEND ODER UNBETÄTIGT, NEUGERÄT > -20° ... +80°C : 10cm³/min. (DIN1343)
FUITE MAXI, PENDANT LA FONCTION "MAINTENIR LA PRESSION" OU SANS ACTIONNEMENT, APPAREIL NOUVEAU -40° ... -20°C : 1500cm³/min.
FUGA MASSIMA, DURANTE LA FUNZIONE "MANTENERE LA PRESSIONE"O SENZA AZIONAMENTO, APPARECCHIO NUOVO

SOUND LEVEL IN A DISTANCE OF 7M :
SCHALLPEGEL IM ABSTAND VON 7M : <69 dBA
NIVEAU SONORE Ã UNE DISTANCE DE 7M :
LIVELLO SONORO AD UNA DISTANZA DI 7M :
ACCORDING TO / NACH / SUIVANT / SECONDO ISO 3744

INSPECTION MARK
PRUEFZEICHEN EMV: E1 10R - 03 5902
MARQUE DE CONTRUCLE
STAMPA DI COLLAUDO

NOMINAL DIAMETER / NENNWEITE / DIAMÉTRE NOMINAL / DIAMETRO NOMINALE
11 -> 21 : ≧Ø10mm
12 -> 22 : ≧Ø10mm
21; 22 -> 31/32 : ≧Ø9mm

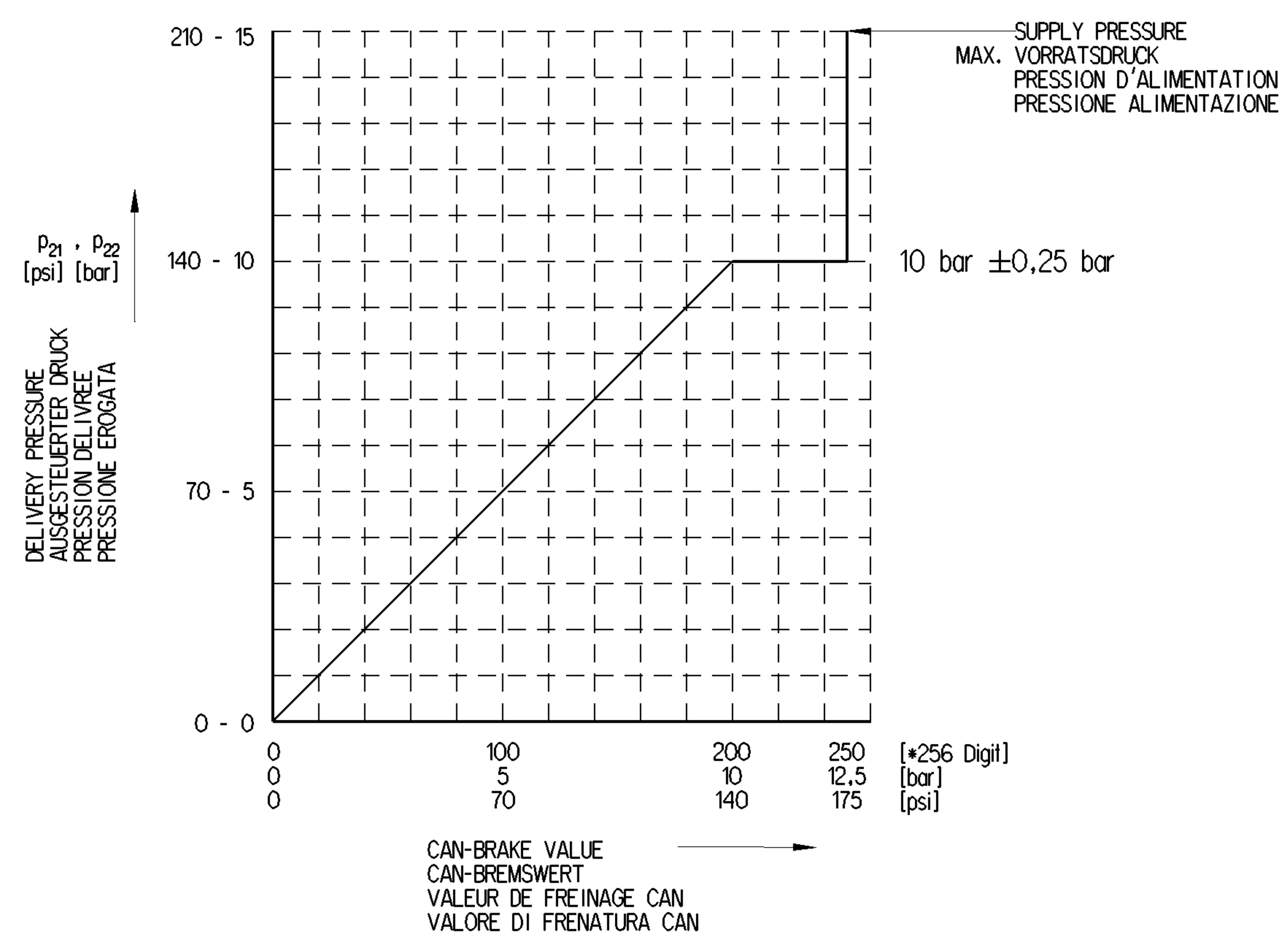

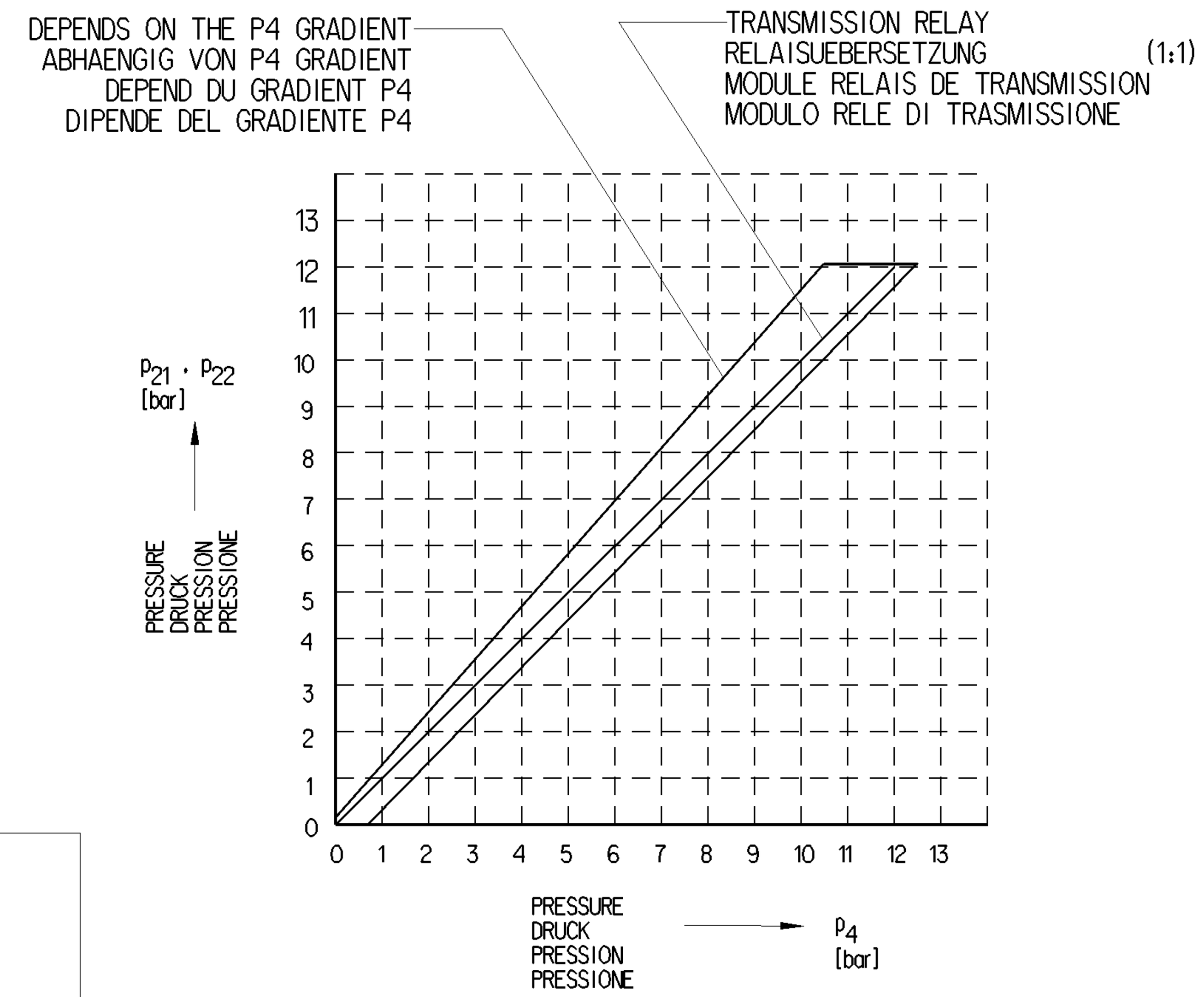

PORT PORT	ANSCHLUSS ATTACCO	
SIDE L SEITE L COTE L LATO L	SIDE R SEITE R COTE R LATO R	FUNCTION FUNKTION FUNCTION FUNZIONE
11	12	SUPPLY, ENERGIEZUFLUSS VOM VORRAT, ALIMENTATION, ALIMENTAZIONE
4		BACK UP PORT, REDUNDANZANSCHLUSS, ORIFICE DE REDONDANCE, ATTACCO DI RIDONDANZA
21	22	DELIVERY (DIRECT), ENERGIEABFLUSS (DIREKT), UTILISATION (DIRECT), MANDATA (DIRETTA)
31	32	EXHAUST, ANSCHLUSS ATMOSPHAERE, ECHAPPEMENT, SCARICO
X1		WHEEL SPEED SENSOR, ADDITIONAL AXLE SELECTION RADDREHZAHLSENSOR, ZUSATZACHSSELEKTIERUNG CAPTEUR DE VITESSE DE ROUE, SELECTION DE L´ESSIEN SENSORE DI VELOCITA RUOTA, SELEZIONE ASSE ADDIZIONALE
X1.1		ADDITIONAL AXLE IN, ZUSATZACHSE EINGANG; ESSIEU ADDITIONNEL ENTRÉE; ASSE ADDIZIONALE ENTRATA
X1.2		ADDITIONAL AXLE OUT, ZUSATZACHSE AUSGANG; ESSIEU ADDITIONNEL SORTIE; ASSE ADDIZIONALE USCITA
X1.3		NOT CONNECTED, NICHT BELEGT, NE PAS CONNECTE, NON COLLEGATO
X1.4		SENSOR HIGH L, SENSOR HIGH L, CAPTEUR HIGH L, SENSORE ALTO L
X1.5		SENSOR LOW L, SENSOR LOW L, CAPTEUR LOW L, SENSORE BASSO L
X1.6		SENSOR HIGH R, SENSOR HIGH R, CAPTEUR HIGH R, SENSORE ALTO R
X1.7		SENSOR LOW R, SENSOR LOW R, CAPTEUR LOW R, SENSORE BASSO R
X2		CAN, SUPPLY CAN, VERSORGUNG CAN, ALIMENTATION CAN, ALIMENTAZIONE
X2.1		GROUND, MASSE, MASSE, MASSA
X2.2		Ub
X2.3		CAN HIGH , CAN HIGH , CAN HIGH , CAN ALTO
X2.4		CAN LOW , CAN LOW , CAN LOW , CAN BASSO

General Specification: JED-334-1 , Size ISO 14405 LP						
Further Technical Data: 480 106 100 0						
Doc. Code: 035			Sheet:	To		
General Tolerances JED-261						
		Range of Nominal Dimensions (± mm)				
Class 1)		≤ 50	> 50 ≤ 180	> 180 ≤ 400	> 400	
Fine		0.5	1.0	1.5	2.0	
Medium	X	1.0	2.0	3.0	4.0	±3°
Coarse		2.0	3.5	5.0	6.5	
Tapped Holes acc. JED-388-4						
1) Tolerance Class Applied Crossmarked						

Copyright WABCO®

Date	Signature
Drawn	
2015-04-20	Elze
Checked	
2015-04-24	Beier
Expert	Beier

WABCO

EBS AXLE MODULATOR
EBS-ACHSMODULATOR
MODULATEUR D´ESSIEU EBS
MODULATORE ASSALE EBS

Mass	Scale	Material No.	Date of first issue: 2011-08-17		
3.4 KG	1:1 (2:1)	480 106 100 0	Doc.Code 053	Language ML	Sheet 2/2
Size A 1	CAD System CREO	ECN-No. 167360	Revision 10x F	Techn. Resp. 6840	Replacement for 884 013 085 0

100mm

Toute Communication ou reproduction de ce document, toute exploitation ou communication de son contenu sont interdites, sauf autorisation expresse. Tout manquement a cette regle constitue un abus evident et expose son auteur au versement de dommages et interets. Tous droits de propriete industrielle reserves, notamment en matiere de brevets et de modeles.
Weitergabe sowie Vervielfaeltigung dieser Unterlage, Verwertung und Mitteilung ihres Inhalts nicht gestattet, soweit nicht ausdruecklich zugestanden. Zuwiderhandlungen stellen einen offensichtlichen Missbrauch dar und verpflichten zu Schadenersatz. Alle Rechte fuer den Fall der Patenterteilung oder Gebrauchsmuster-Eintragung vorbehalten.
Non e permesso consegnare a terzi o riprodurre questo documento, ne utilizzarne il contenuto o renderlo comunque noto a terzi senza autorizzazione esplicita. Ogni infrazione costituira un evidente abuso e comportera il risarcimento dei danni subiti. E'fatta riserva di tutti i diritti derivanti da brevetti o modelli.
Copying of this document and giving it to others and the use or communication of the contents thereof, are forbidden without express authority. Contravention of this restriction will constitute an evident abuse and result in a liability to the payment of damages. All rights are reserved in the event of the grant of patent or registration of a utility model or design. This document is the subject of copyright.