(D) DEGREE OF PROTECTION ACC.IEC 529	COMPLETE DEVICE	IP 6K6K, IP 6K9K	
	ELECTRIC TERMINALS WITH MOUNTED COUPLING	IP 6K7	
PROTECTION CLASS		III	
PERMISSIBLE INSTALLATION		±45°	
THE VALVE CORRESPONDS TO THE REGULATIONS FOR ELECTROMAGNETIC DEVICES ACCORDING TO		VDE 0580	
FOR FURTHER TECHNICAL DATA SEE PRODUCT SPECIFICATION			

MARKING OF PORTS		TORQUE
1	SUPPLY	Mmax. = 53Nm
2	DELIVERY OF ENERGY	Mmax. = 53Nm
3	EXHAUST	-
42	CONTROL	Mmax. = 34Nm
6	ELECTRICAL CONTROL (MAGNET)	

	MATERIAL		SURFACE PROTECTION	
I	Al	JED-029M1	Cr	(D) JED-259
II	Fe	JED-051M4	Zn/Fe	JED-256-1
III	X47Cr14	JED-058M2		
IV	Pa6.6	JED-559		
V	CuZn	JED-570-616		
VI	AlMg5			
VII	Fe	JED-021M3	Zn/Fe	JED-256-1
VIII	NBR	JED-235		
IX	Al	JED-077-1	Anodic Oxidation	JED-007-1
(D) X	Fe	JED-051M4	Zn/Fe	JED-256-4
(D) XI	Al	JED-029M1	Cr	JED-259-1

(D) (1)	CUSTOMER NO. OR COUNTRY OF ORIGIN OR BLANK
(2)	MANUFACTURING PLANT JED-225
(3)	WEEK / YEAR OF MANUFACTURE
(4)	WABCO-DEVICE NUMBER

WORKING MEDIUM	AIR (WATER-, OIL AND ALCOHOL CONTAINING)
WORKING ENVIRONMENT	AIR (CONTAINING WATER, SALT, DUST AND OIL)
THERMAL RANGE OF APPLICATION UNDER NORMAL AMBIANT CONDITIONS	-40°...+80°C
SHORT TERM RESISTANCE TO HEAT	+110°C (p1= 0 bar, max. 1h)

WORKING PRESSURE	MAX.pe 13 bar
SUPPLY PRESSURE	MAX.pe 13 bar
SOCKET	DIN 72585 1A 2.1-SN / K2
VOLTAGE	6.5V 24V - 9.5V
TYPE OF CURRENT	DIRECT CURRENT
SERVICE CONDITION	INTERMITTENT SERVICE
CHARACTERISTIC	1 U > 14.5V
	2 U < 0.5V

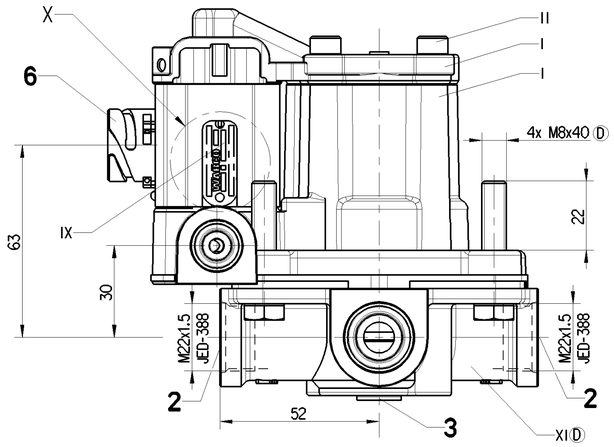

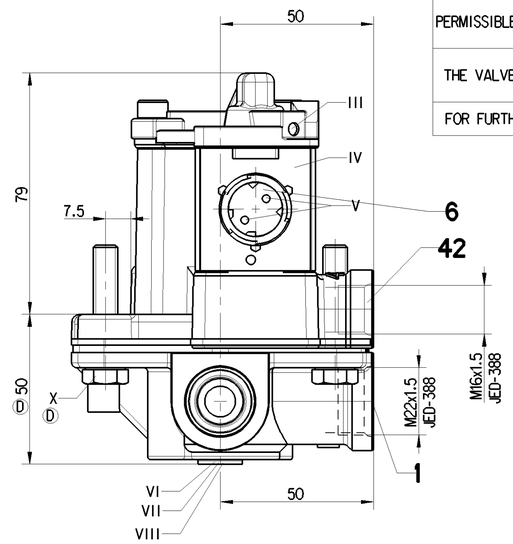

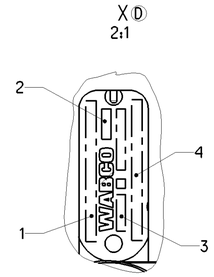

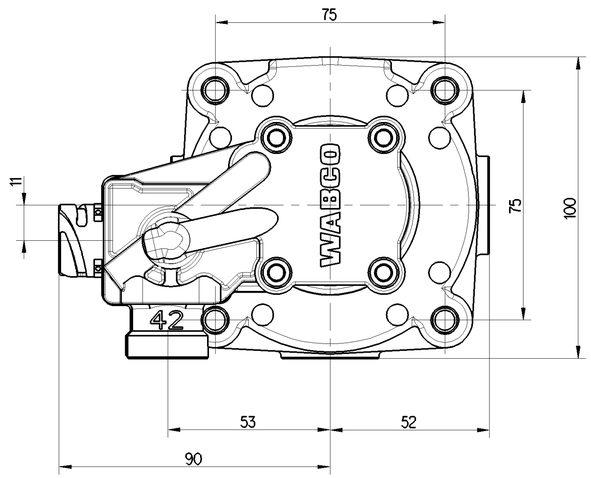

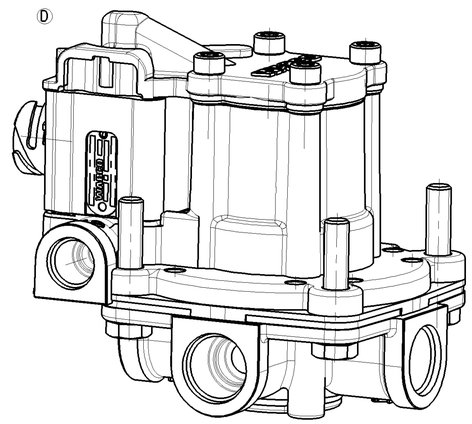

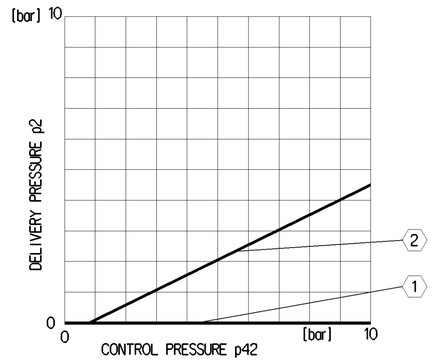

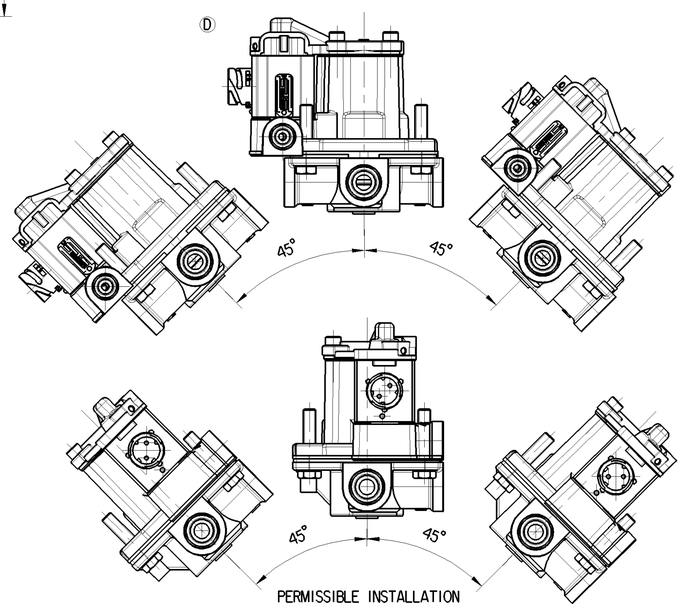

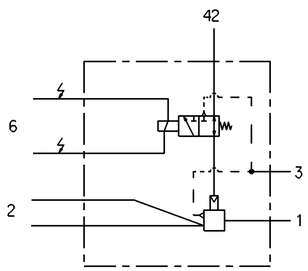

<1> SAFETY CHARACTERISTICS	0
<2> SIGNIFICANT CHARACTERISTICS	0

(D)

General Specification: JED-334-0 , Size ISO 14405-1 E					
Further Technical Data: 480 205 102 0					
Doc. Code: 035	Sheet: 1	To 11			
General Tolerances JED-261					
Range of Nominal Dimensions (± mm)					
Class 1)	≤ 50	> 50 ≤ 180	> 180 ≤ 400	> 400	∡
Fine	0.5	1.0	1.5	2.0	
Medium X	1.0	2.0	3.0	4.0	±3°
Coarse	2.0	3.5	5.0	6.5	
Tapped Holes acc. ISO 4039 (D)					
1) Tolerance Class Applied Crossmarked					

Copyright WABCO®

Date	Signature
Drawn 2018-01-31	Mierzwa
Checked 2018-02-02	Kluczkiewicz
Expert Kluczkiewicz (D)	

WABCO

SOLENOID RELAY VALVE

Mass	Scale	Material No.	Date of first issue: 2012-06-18		
1.0 (D) kg	1:1	480 205 103 0	Doc.Code 005	Language EN	Sheet 1/1
Size A 1	CAD System Pro/E	ECN-No. 166269	Revision 16 x D	Techn. Resp. 6820	Replacement for 480 205 103 0/97-03-10

100mm

Tout Communication ou reproduction de ce document, toute exploitation ou communication de son contenu sont interdites, sauf autorisation écrite. Tous droits de propriété industrielle réservés, notamment en matière de brevets et de modèles.

Weitergabe sowie Vervielfältigung dieser Unterlage, Verwertung und Mitteilung ihres Inhalts nicht gestattet, soweit nicht ausdrücklich zugestanden. Zuwiderhandlungen verpflichten zu Schadensersatz. Alle Rechte für den Fall der Patenterteilung oder Gebrauchsmustereintragung vorbehalten.

Non è permesso consegnare a terzi o riprodurre questo documento, né utilizzarne il contenuto o renderlo comunque noto a terzi senza esplicita autorizzazione. Ogni violazione obbliga al risarcimento dei danni. Si riserva il diritto di depositare brevetti o modelli.

El titular se reserva el derecho de prohibir la entrega a terceros o la reproducción de este documento, así como el uso o la comunicación de su contenido. Las infracciones obligan a la indemnización de los daños. Se reservan los derechos de patente y de modelo.

Copying of this document and giving it to others and the use or communication of the contents thereof, are forbidden without express authority. Offenders are liable to the payment of damages. All rights are reserved in the event of the grant of patent or registration of a utility model or design. This document is the subject of copyright.

Doc. code: 035 / version: 00 / date: Mar 2018 / file: 480205103_.prt